SHANGHAI SUPERHOUSE BUILIDNG MATERICAL CO., LTD.
SPA 150 STOREFRONT SYSTEM - L.M.I.

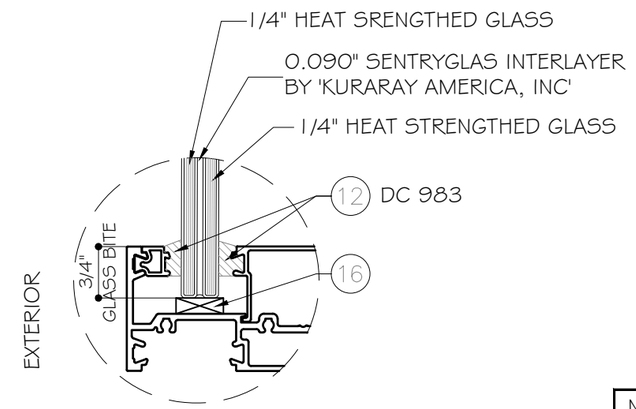

G1 — GLASS TYPE 'G1' (L.M.I.)
9/16" NOMINAL OVERALL

NOTE:
GLASS COMPLIES WITH ASTM E1300-09
(3 SEC. GUSTS).

GENERAL NOTES:

- THIS PRODUCT HAS BEEN DESIGNED AND TESTED TO COMPLY WITH THE REQUIREMENTS OF THE 6TH EDITION FLORIDA BUILDING CODE (2017) INCLUDING HIGH VELOCITY HURRICANE ZONE (HVHZ).
- WINDOWS RATED FOR LARGE AND SMALL MISSILE IMPACT. LMI SYSTEM TO BE USED FOR INSTALLATIONS UP TO 30 FT OF GRADE. FOR ABOVE 30 FT OF GRADE, SMI TO BE USED. IMPACT SHUTTERS ARE NOT REQUIRED.
- THESE WINDOWS ARE APPROVED FOR AIR AND WATER INFILTRATION.
- ANCHORS SHALL BE AS LISTED, SPACED AS SHOWN ON DETAILS. ANCHORS EMBEDMENT TO BASE MATERIAL SHALL BE BEYOND WALL DRESSING OR STUCCO.
- ANCHORING OR LOADING CONDITIONS NOT SHOWN IN THESE DETAILS ARE NOT PART OF THIS APPROVAL.
- MATERIALS INCLUDING BUT NOT LIMITED TO STEEL/METAL SCREWS THAT COME INTO CONTACT WITH OTHER DISSIMILAR MATERIALS SHALL MEET THE REQUIREMENTS OF THE 6TH EDITION FLORIDA BUILDING CODE (2017) SECTION AS APPLICABLE.
- METAL STRUCTURES NOT SHANGHAI SUPERHOUSE BUILDING MATERIAL TO BE DESIGNED TO SUPPORT THE LOADS IMPOSED BY THIS GLAZING SYSTEM AND TO TRANSFER SUCH LOADS TO THE BUILDING MAIN STRUCTURE.
- ULTIMATE LOAD OBTAINED FROM ASCE 7-10, MULTIPLY BY 0.6 SHALL BE LESS THAN OR EQUAL TO MAX. DESIGN LOAD IN THIS DOCUMENT. THE DESIGN LOADS SHOWN IN THIS DOCUMENT ARE ALLOWABLE DESIGN LOADS.

USE CHARTS AS FOLLOWS.

STEP 1: DETERMINE DESIGN WIND LOAD REQUIREMENTS BASED ON WIND VELOCITY, BLDG. HEIGHT, WIND ZONE USING APPLICABLE ASCE 7-10 STANDARD OR WIND TUNNEL REPORTS.

STEP 2: SEE SHEET E1 FOR TYPICAL WINDOW WALL ELEVATION. MULLION CAPACITIES SEE SHEET M1 & M2.

STEP 3: SEE SHEET A1 FOR ANCHOR OPTIONS. SEE SHEET E1 FOR NUMBER OF ANCHORS REQUIRED.

ABBREVIATIONS AND SYMBOLS

D.L.O. - DAYLITE OPENING
F.H. - FRAME HEIGHT
F.W. - FRAME WIDTH
W/ - WITH
W/O - WITHOUT
O.C. - ON CENTER

C / 7 — SECTION NUMBER / SHEET NUMBER

LIMITATIONS OF USE

A- THIS PRODUCT EVALUATION DOCUMENT (P.E.D.) PREPARED BY THIS ENGINEER IS GENERIC AND DOES NOT PROVIDE INFORMATION FOR A SITE SPECIFIC PROJECT; i.e. WHERE THE SITE CONDITIONS DEVIATE FROM THE P.E.D.

B- CONTRACTOR TO BE RESPONSIBLE FOR THE SELECTION, PURCHASE AND INSTALLATION OF THIS PRODUCT BASED ON THIS PRODUCT EVALUATION PROVIDED HE/SHE DOES NOT DEVIATE FROM THE CONDITIONS DETAILED ON THIS DOCUMENT.

C- THIS PRODUCT EVALUATION DOCUMENT WILL BE CONSIDERED INVALID IF ALTERED BY ANY MEANS.

D- SITE SPECIFIC PROJECTS SHALL BE PREPARED BY A FLORIDA REGISTERED ENGINEER OR ARCHITECT WHICH WILL BECOME THE ENGINEER OF RECORD (E.O.R.) FOR THE PROJECT AND WHO WILL BE RESPONSIBLE FOR THE PROPER USE OF THE P.E.D ENGINEER OF RECORD, ACTING AS A DELEGATED ENGINEER TO THE P.E.D ENGINEER SHALL SUBMIT TO THIS LATTER THE SITE SPECIFIC DRAWINGS FOR REVIEW.

E- THIS P.E.D. SHALL BEAR THE DATE AND ORIGINAL SEAL AND SIGNATURE OF THE PROFESSIONAL ENGINEER OF RECORD THAT PREPARED IT.

FLORIDA APPROVAL:
FL # 29474.1

YIPING WANG, P.E.
FLORIDA REGISTRATION
LICENSE NO. 55983
L.M.N. 2867
YIPING WANG LICENSE No 55983 STATE OF FLORIDA PROFESSIONAL ENGINEER
April 22nd, 2019

MCY ENGINEERING, INC.
GLAZING CONSULTANTS
8501 SW 124 Ave. Ste. 205A
MIAMI, FL. 33183
P: 786.360.2786
www.MCYEngineering.com mcy@mcyengineering.com

SPA150 STOREFRONT SYSTEM - L.M.I.&S.M.I.
SHANGAI SUPERHOUSE BUILDING MATERIAL
No.10 Hangfan Road, Pudong District,
Shanghai, China
TEL.86 021-5822 0630

Rev. No.	Date	Drawn By	Description

Drawn Date 04/19/2019
Drawn By

DRAWING NO.
AD19-15

COVER

Sheet No.
1 OF 9

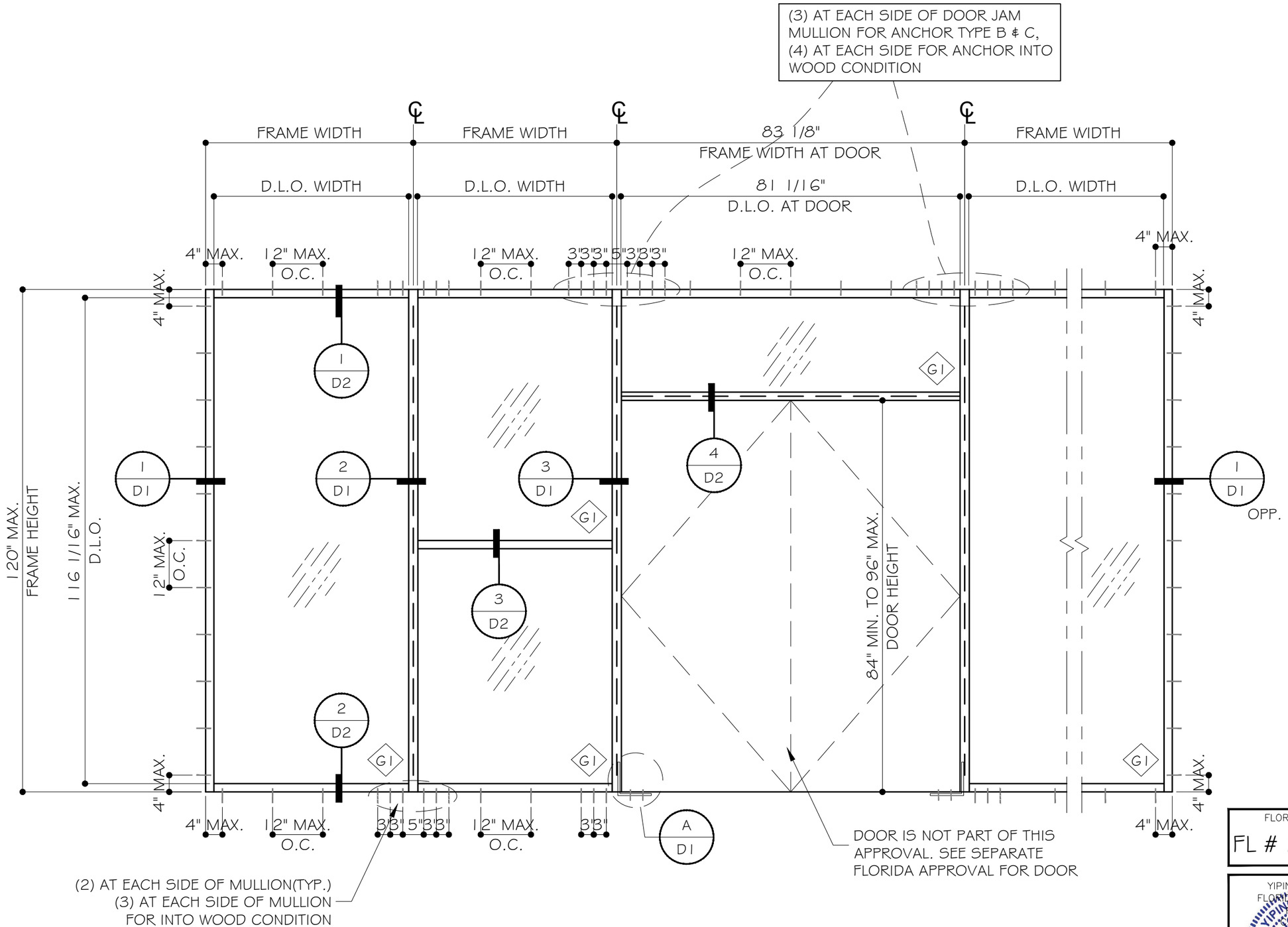

TYPICAL EXTERIOR ELEVATIONS

SEE SHEET M1, M2 FOR MULLION SIZE & CAPACITIES

FLORIDA APPROVAL:

FL # 29474.1

YIPING WANG, P.E.
FLORIDA REGISTRATION
LICENSE No. 55983
C.O.A.N. 28671

YIPING WANG LICENSE No 55983 STATE OF FLORIDA PROFESSIONAL ENGINEER

April 22nd, 2019

MCY ENGINEERING, INC.
GLAZING CONSULTANTS
8501 SW 124 Ave. Ste. 205A
MIAMI, FL. 33183
P: 786.360.2786
www.MCYEngineering.com
mcy@mcyengineering.com

SPA150 STOREFRONT SYSTEM - L.M.I.&S.M.I.

SHANGAI SUPERHOUSE BUILDING MATERIAL
No.10 Hangfan Road, Pudong District,
Shanghai, China
TEL.86 021-5822 0630

Rev. No.	Date	Drawn By	Description

Drawn Date: 04/19/2019

Drawn By:

DRAWING NO. AD19-15

E1

Sheet No. 2 OF 9

DESIGN LOAD CAPACITY WITHOUT HORIZONTAL- PSF			
MULLION DIMENSION		(M1)	
MULLION WIDTH (IN)	MULLION HEIGHT (IN)	EXT. (+)	INT. (-)
30	60	70.0	70.0
48		70.0	70.0
60		70.0	70.0
66		70.0	70.0
72		70.0	70.0
30	66	70.0	70.0
48		70.0	70.0
60		70.0	70.0
66		70.0	70.0
72		70.0	70.0
30	72	70.0	70.0
48		70.0	70.0
60		70.0	70.0
66		70.0	70.0
72		70.0	70.0
30	78	70.0	70.0
48		70.0	70.0
60		70.0	70.0
66		70.0	70.0
72		70.0	70.0
30	84	70.0	70.0
48		70.0	70.0
54		70.0	70.0
60		70.0	70.0
66		70.0	70.0
30	90	70.0	70.0
42		70.0	70.0
48		70.0	70.0
54		70.0	70.0
60		70.0	70.0
30	96	70.0	70.0
42		70.0	70.0
48		70.0	70.0
54		70.0	70.0
60		70.0	70.0
30	102	70.0	70.0
36		70.0	70.0
42		70.0	70.0
48		70.0	70.0
54		70.0	70.0
30	108	70.0	70.0
36		70.0	70.0
42		70.0	70.0
48		70.0	70.0

DESIGN LOAD CAPACITY WITHOUT HORIZONTAL- PSF			
MULLION DIMENSION		(M1)	
MULLION WIDTH (IN)	MULLION HEIGHT (IN)	EXT. (+)	INT. (-)
30	114	70.0	70.0
36		70.0	70.0
42		70.0	70.0
48		70.0	70.0
49.2	118.11	70.0	70.0
30	120	70.0	70.0
36		70.0	70.0
42		70.0	70.0
48		70.0	70.0

NOTE: JAMB ARE ANCHORED JAMB

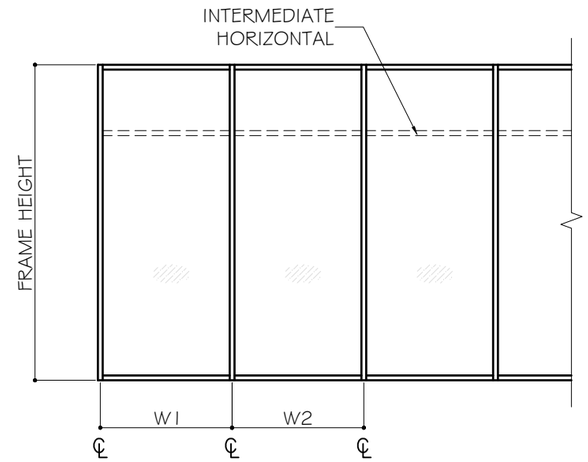

WIDTH (W) AT MULLION $= \frac{W1 + W2}{2}$

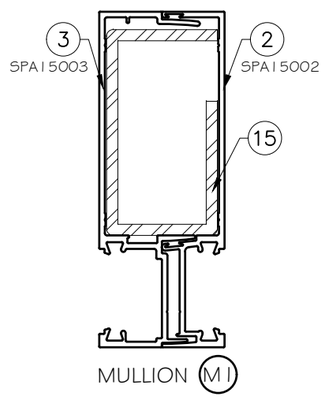

MULLION (M1)

M2	Ix IN^4	Sx IN^3
SPA15002	3.6019	1.1049
SPA15003	4.6391	1.4655
STEEL	3.0362	1.5711
TOTAL	17.046	

Ix.tot =Ix Alum.+2.9*Ix.STL

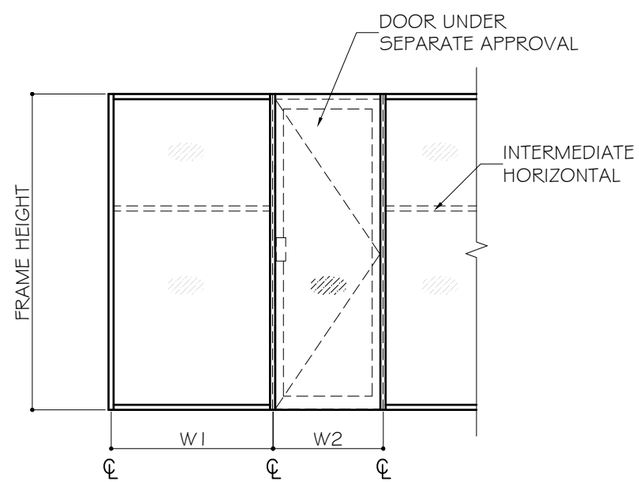

WIDTH (W) AT MULLION $= \frac{W1 + W2}{2}$

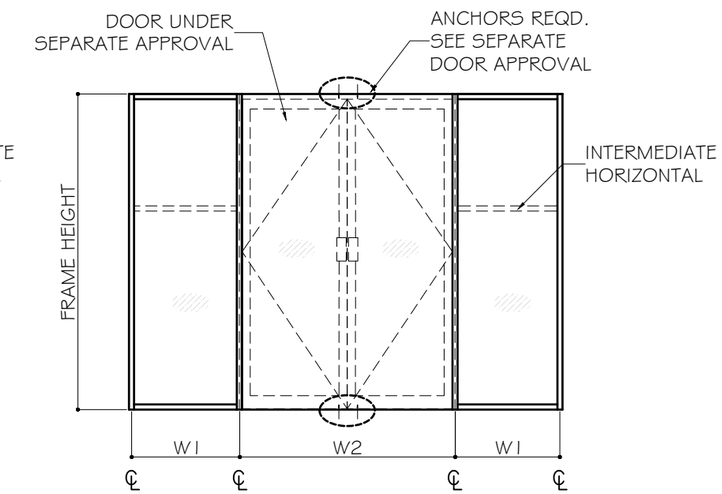

WIDTH (W) AT MULLION $= \frac{W1}{2} + \frac{W2}{4}$

FLORIDA APPROVAL:

FL # 29474.1

YIPING WANG, P.E.
FLORIDA REGISTRATION
LICENSE NUMBER
L.C.N. 2867

April 22nd, 2019

MCY ENGINEERING, INC.
GLAZING CONSULTANTS
8501 SW 124 Ave. Ste. 205A
MIAMI, FL. 33183
P: 786.360.2786
www.MCYEngineering.com
mcy@mcyengineering.com

SPA150 STOREFRONT SYSTEM - L.M.I.&S.M.I.

SHANGAI SUPERHOUSE BUILDING MATERIAL
No.10 Hangfan Road, Pudong District,
Shanghai, China
TEL.86 021-5822 0630

Rev. No.	Date	Drawn By	Description

Drawn Date 04/19/2019

Drawn By

DRAWING NO.

AD19-15

M1

Sheet No.

3 OF 9

DOOR JAMB MULLION DESIGN LOAD CAPACITY - PSF					
WINDOW PANEL DIMENSION				DESIGN LOAD	
FRAME HEIGHT(IN) (L)	DOOR HEIGHT(IN) (A)	DOOR WIDTH(IN) (W1)	SIDELITE WIDTH(IN) (W2)	EXT. (+)	INT. (-)
118	84	72	42	70.0	70.0
			48	70.0	70.0
			54	67.0	67.0
			60	64.0	64.0
		78	42	70.0	70.0
			48	68.0	68.0
			54	65.0	65.0
		84	42	69.0	69.0
			48	65.0	65.0
			54	62.0	62.0
	90	72	42	70.0	70.0
			48	70.0	70.0
			54	70.0	70.0
			60	66.0	66.0
		78	42	70.0	70.0
			48	70.0	70.0
			54	67.0	67.0
		84	42	70.0	70.0
			48	68.0	68.0
	96	72	42	70.0	70.0
			48	70.0	70.0
			54	70.0	70.0
			60	67.0	67.0
		78	42	70.0	70.0
			48	70.0	70.0
			54	69.0	69.0
		84	42	70.0	70.0
			48	70.0	70.0

DOOR JAMB MULLION DESIGN LOAD CAPACITY - PSF					
WINDOW PANEL DIMENSION				DESIGN LOAD	
FRAME HEIGHT(IN) (L)	DOOR HEIGHT(IN) (A)	DOOR WIDTH(IN) (W1)	SIDELITE WIDTH(IN) (W2)	EXT. (+)	INT. (-)
120	84	72	42	70.0	70.0
			48	68.0	68.0
			54	65.0	65.0
			60	61.0	61.0
		78	42	69.0	69.0
			48	65.0	65.0
			54	62.0	62.0
		84	42	66.0	66.0
			48	62.0	62.0
	90	72	42	70.0	70.0
			48	70.0	70.0
			54	67.0	67.0
			60	63.0	63.0
		78	42	70.0	70.0
			48	68.0	68.0
			54	64.0	64.0
		84	42	69.0	69.0
			48	65.0	65.0
	96	72	42	70.0	70.0
			48	70.0	70.0
			54	69.0	69.0
			60	66.0	66.0
		78	42	70.0	70.0
			48	70.0	70.0
			54	67.0	67.0
		84	42	70.0	70.0
			48	68.0	68.0

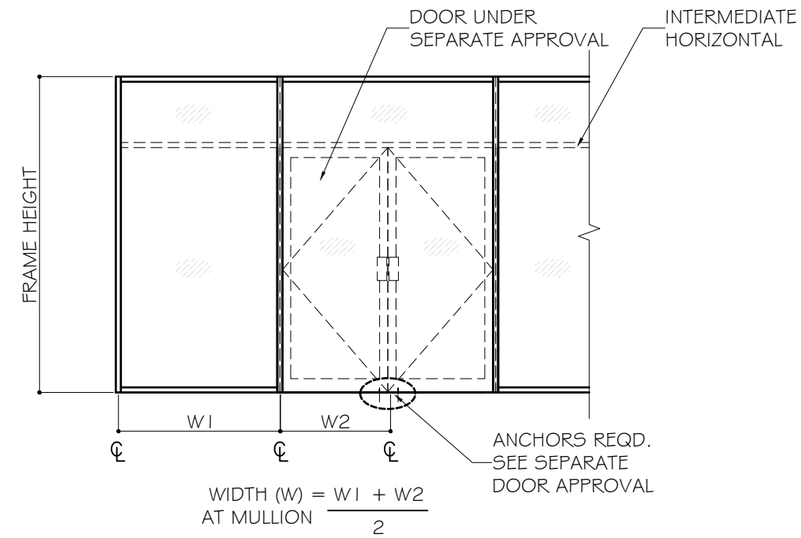

NOTE: ANCHOR AT DOOR JAMB MULLION SEE SHEET E1

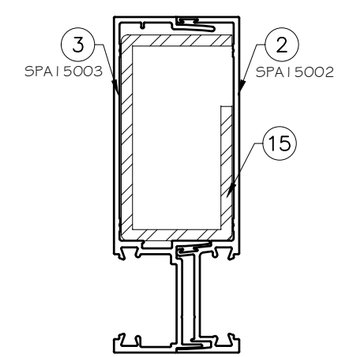

DOOR MULLION M1

M2	Ix IN^4	Sx IN^3
SPA15002	3.6019	1.1049
SPA15003	4.6391	1.4655
STEEL	3.0362	1.5711
TOTAL	17.046	

Ix.tot =Ix Alum.+2.9*Ix.STL

FLORIDA APPROVAL:

FL # 29474.1

YIPING WANG, P.E.
FLORIDA REGISTRATION
LICENSE No. 55983
C.O.A.N. 28671

YIPING WANG LICENSE No 55983 STATE OF FLORIDA PROFESSIONAL ENGINEER

April 22nd, 2019

MCY ENGINEERING, INC.
GLAZING CONSULTANTS
8501 SW 124 Ave. Ste. 205A
MIAMI, FL. 33183
P: 786.360.2786
www.MCYEngineering.com
mcy@mcyengineering.com

SPA150 STOREFRONT SYSTEM - L.M.I.&S.M.I.

SHANGAI SUPERHOUSE BUILDING MATERIAL
No.10 Hangfan Road, Pudong District,
Shanghai, China
TEL.86 021-5822 0630

Rev. No.	Date	Drawn By	Description

Drawn Date 04/19/2019

Drawn By

DRAWING NO. AD19-15

M2

Sheet No. 4 OF 9

TYPICAL ANCHOR TYPES:
SEE ELEVATIONS FOR SPACING

TYPE "A": 1/4" DIA. ULTRACON BY 'ELCO' (Fu=177 KSI, Fy=155 KSI)
INTO 2BY WOOD BUCKS OR WOOD STRUCTURE
WITH 1 3/4" MIN. FENETRATION INTO WOOD

THRU 1BY OR 2BY WOOD BUCKS INTO CONCRETE
WITH 1 3/4" MIN. EMBED INTO CONCRETE

TYPE "B": 1/4" DIA. ULTRACON BY 'ELCO' (Fu=177 KSI, Fy=155 KSI)
DIRECTLY INTO CONCRETE
WITH 1 3/4" MIN. EMBED INTO CONCRETE

INTO HOLLOW BLOCK(JAMB ONLY)
WITH 1 1/4" MIN. EMBED

INTO GROUT FILLED BLOCKS(JAMB ONLY)
WITH 1 3/4" MIN. EMBED

TYPE "C": 1/4" SMS OR SELF DRILLING SCREW(GRADE 5) (Fu=120 KSI, Fy=90 KSI)
INTO APPROVED MULLIONS
(1/8" THK. MIN.) INTO METAL STRUCTURE

STEEL: 12 GA. MIN. (Fy=36 KSI MIN.)
ALUMINUM: 1/8" THK. MIN. (6063-T5 MIN.)
(STEEL IN CONTACT WITH ALUMINUM TO BE PLATED OR PANTED)

TYPICAL ANCHOR EDGE DISTANCE:
INTO CONCRETE AND MASONRY = 2 1/2" MIN.
INTO WOOD STRUCTURE = 1" MIN.
INTO METAL STRUCTURE = 3/4" MIN.

WOOD SG = 0.55 MIN.
CONCRETE f'c = 3000 psi MIN.
C-90 HOLLOW/FILLED BLOCK f'm = 2000 psi MIN.
NORMAL STRENGTH CMU(AT JAMB ONLY)

GLAZING BEAD AT FRAME SILL SEALED TO GLASS WITH DOW CORNING 983.
FRAME CORNERS SEALED WITH DOW CORNING 999 OR EQUAL COMPATIBLE

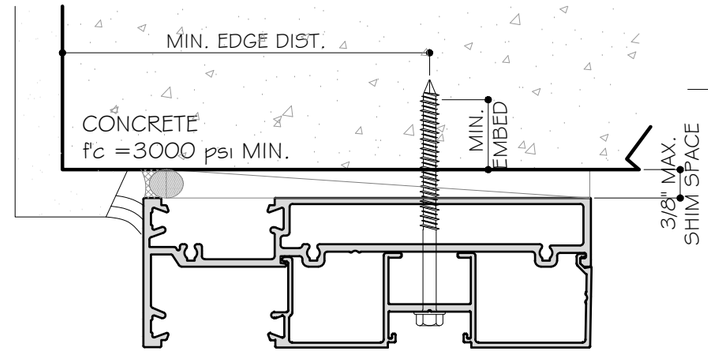

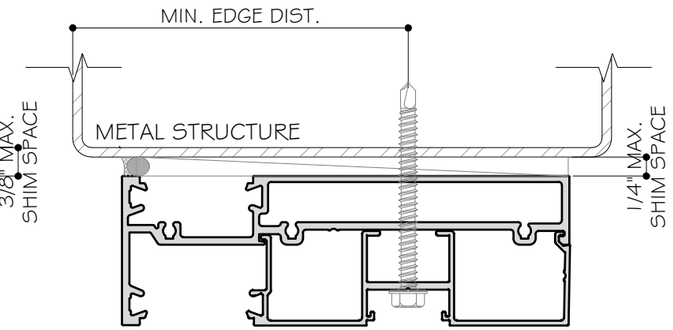

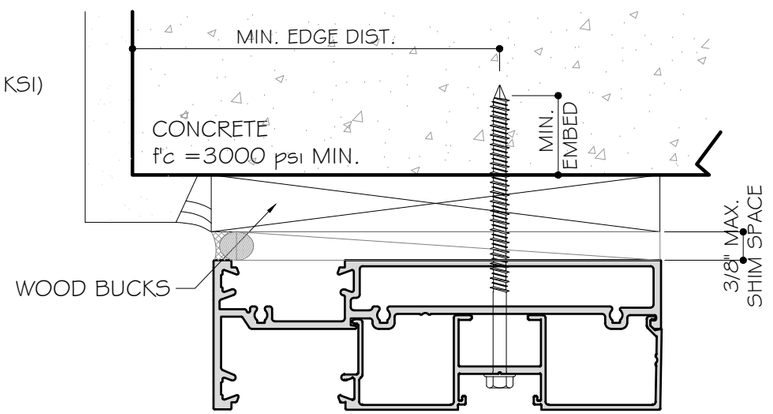

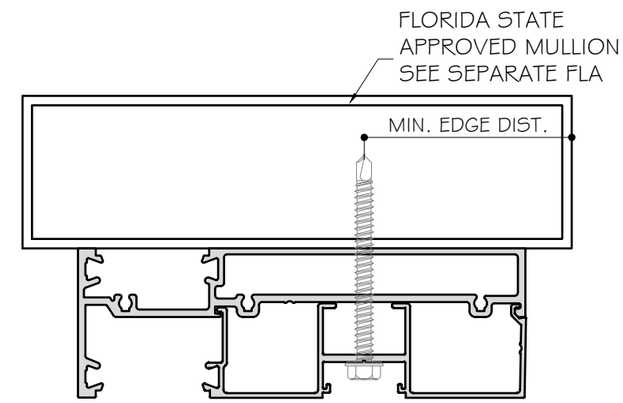

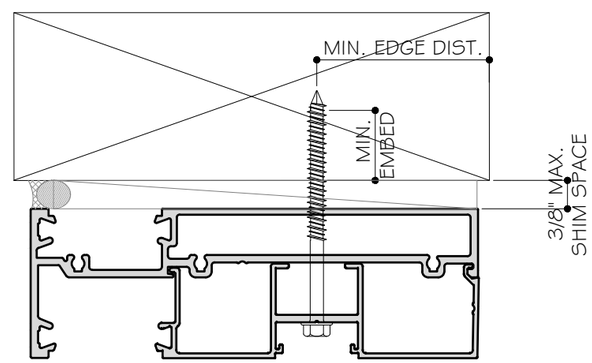

1X OR 2X WOOD BUCKS AND METAL STRUCTURES NOT BY SHANGHAI SUPERHOUSE BUILDING MATERIAL MUST SUPPORT LOADS IMPOSED BY GLAZING SYSTEM AND TRANSFER THEM TO THE BUILDING STRUCTURE.

FLORIDA APPROVAL:
FL # 29474.1

YIPING WANG, P.E.
FLORIDA REGISTRATION
LICENSE NO. 55983
C.A.N. 28671
YIPING WANG No 55983 STATE OF FLORIDA PROFESSIONAL ENGINEER
April 22nd, 2019

MCY ENGINEERING, INC.
GLAZING CONSULTANTS
8501 SW 124 Ave. Ste. 205A
MIAMI, FL 33183
P: 786.360.2786
www.MCYEngineering.com
mcy@mcyengineering.com

SPA150 STOREFRONT SYSTEM - L.M.I.&S.M.I.
SHANGAI SUPERHOUSE BUILDING MATERIAL
No.10 Hangfan Road, Pudong District,
Shanghai, China
TEL.86 021-5822 0630

Rev. No.	Date	Drawn By	Description

Drawn Date 04/19/2019
Drawn By

DRAWING NO.
AD19-15

A1

Sheet No.
5 OF 9

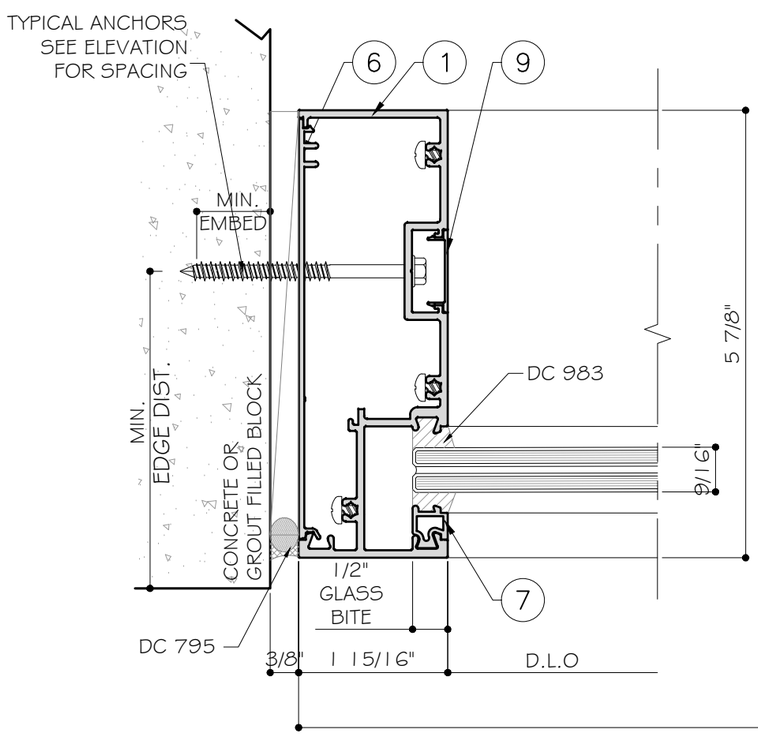

1 / D1 JAMB DETAIL

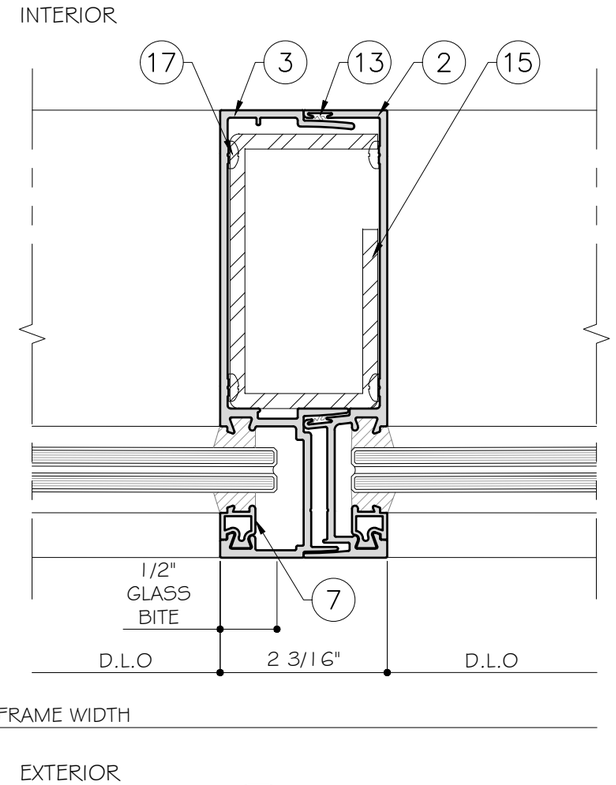

2 / D1 MULLION DETAIL

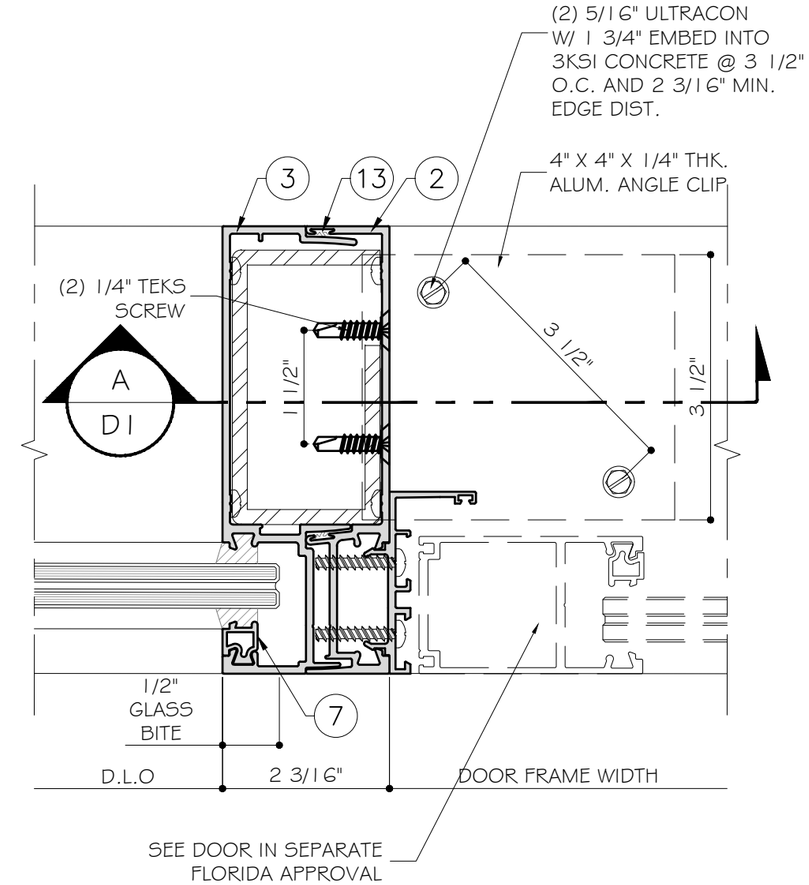

3 / D1 DETAIL

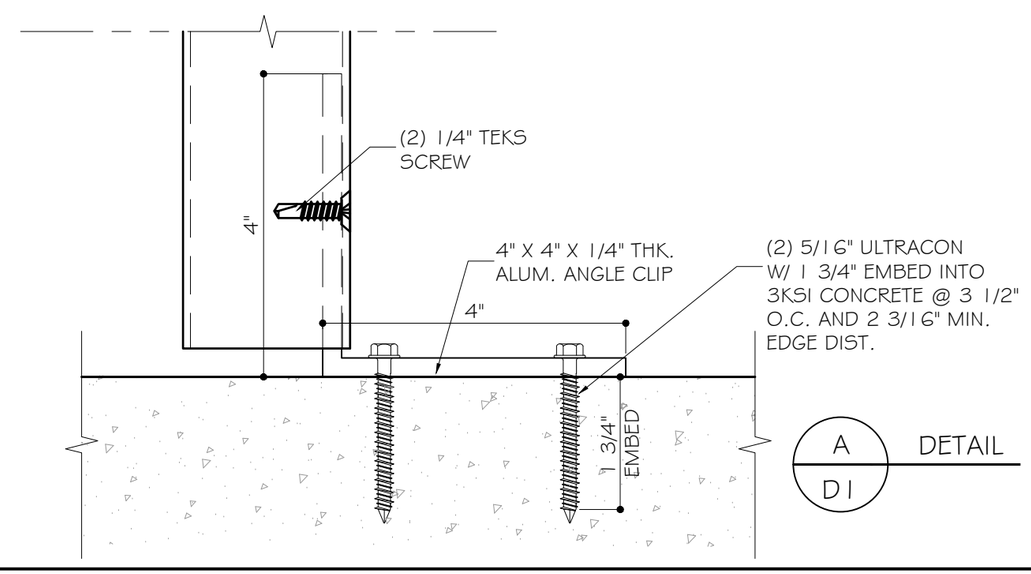

A / D1 DETAIL

FLORIDA APPROVAL:

FL # 29474.1

YIPING WANG, P.E.
FLORIDA REGISTRATION
LICENSE NO. 55983
M.C.N. 2867

YIPING WANG LICENSE No 55983 STATE OF FLORIDA PROFESSIONAL ENGINEER

April 22nd, 2019

MCY ENGINEERING, INC.
GLAZING CONSULTANTS
8501 SW 124 Ave. Ste. 205A
MIAMI, FL. 33183
P: 786.360.2786
www.MCYEngineering.com
mcy@mcyengineering.com

SPA150 STOREFRONT SYSTEM - L.M.I.&S.M.I.

SHANGAI SUPERHOUSE BUILDING MATERIAL
No.10 Hangfan Road, Pudong District,
Shanghai, China
TEL.86 021-5822 0630

Rev. No.	Date	Drawn By	Description

Drawn Date 04/19/2019

Drawn By

DRAWING NO.
AD19-15

D1

Sheet No.
6 OF 9

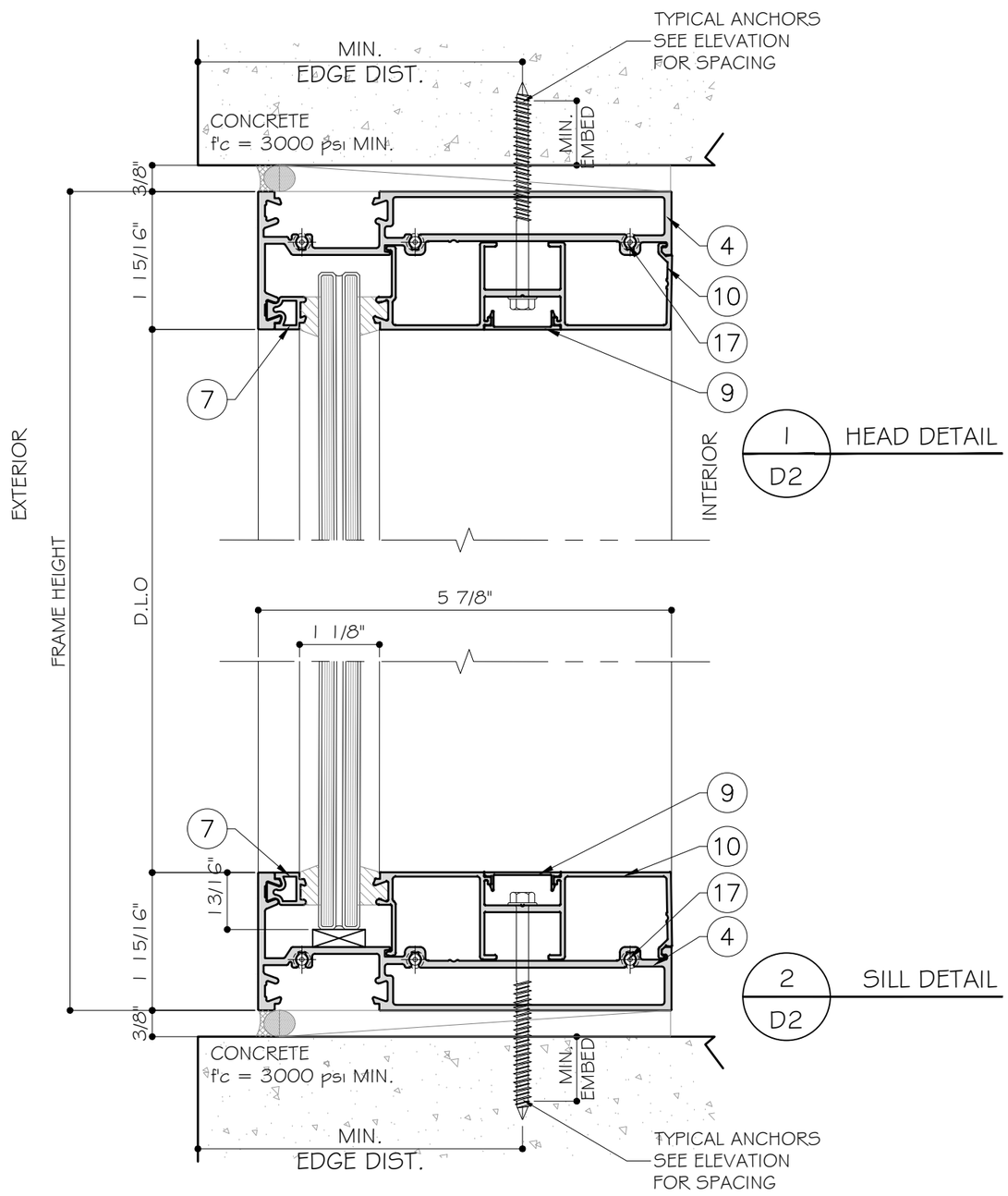

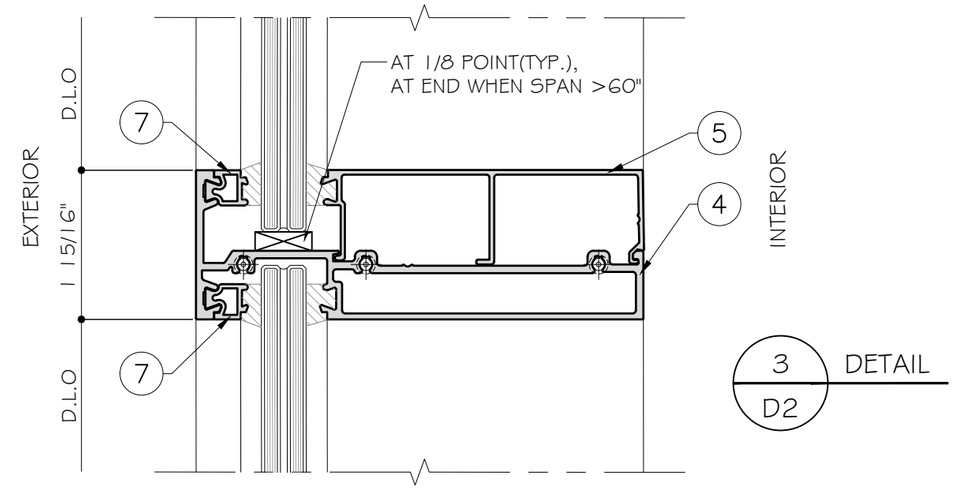

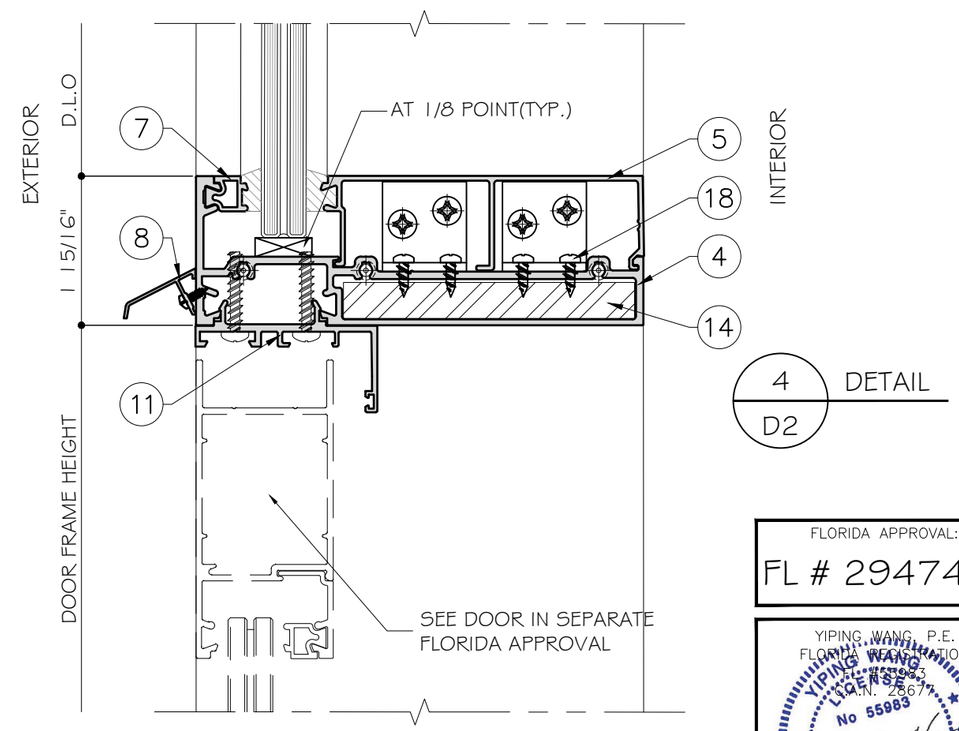

FLORIDA APPROVAL:

FL # 29474.1

YIPING WANG, P.E.
FLORIDA REGISTRATION
LICENSE NO.
C.O.A.N. 28671

YIPING WANG
LICENSE
No 55983
STATE OF FLORIDA
PROFESSIONAL ENGINEER

April 22nd, 2019

MCY ENGINEERING, INC.
GLAZING CONSULTANTS
8501 SW 124 Ave. Ste. 205A
MIAMI, FL. 33183
P: 786.360.2786
www.MCYEngineering.com
mcy@mcyengineering.com

SPA150 STOREFRONT SYSTEM - L.M.I.&S.M.I.

SHANGAI SUPERHOUSE BUILDING MATERIAL
No.10 Hangfan Road, Pudong District,
Shanghai, China
TEL.86 021-5822 0630

Rev. No.	Date	Drawn By	Description

Drawn Date 04/19/2019

Drawn By

DRAWING NO.
AD19-15

D2

Sheet No.
7 OF 9

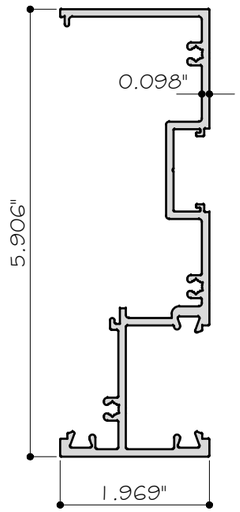

1 JAMB
SPA15001A 6063-T5

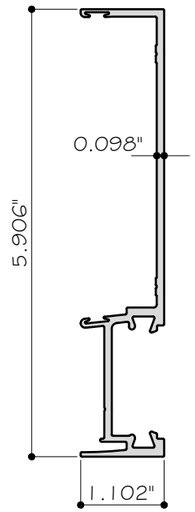

2 FEMALE MULLION
SPA15002 6063-T5

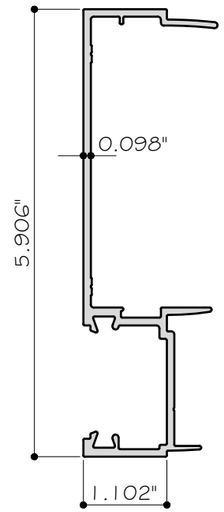

3 MALE MULLION
SPA15003 6063-T5

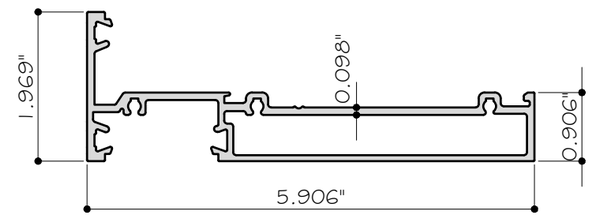

4 HEAD/SILL/INTERMEDIATE HORIZONTAL
SPA15004 6063-T5

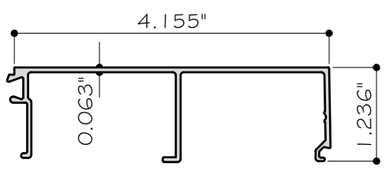

5 GLASS STOP
SPA15005 6063-T5

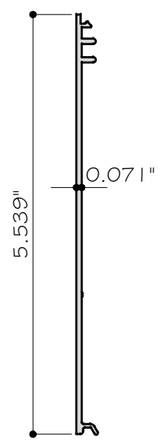

6 JAMB FILLER
SPA15007 6063-T5

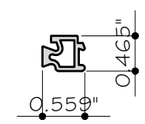

7 POCKET FILLER
SPA10016 6063-T5

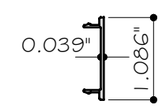

9 SCREW COVER
SPA13006 6063-T5

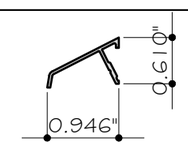

8 AWING CAP
SP100T003 6063-T5

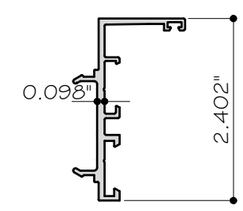

11 SASH REBATE
SPA13006 6063-T5

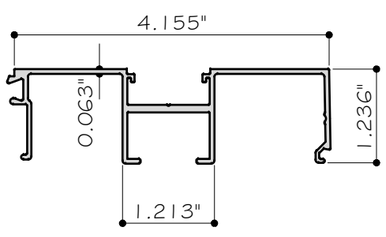

10 GLASS STOP
SPA15015 6063-T5

FLORIDA APPROVAL:
FL # 29474.1

YIPING WANG, P.E.
FLORIDA REGISTRATION
LICENSE NO. 55983
LIC.N. 28671
YIPING WANG LICENSE No 55983 STATE OF FLORIDA PROFESSIONAL ENGINEER
April 22nd, 2019

MCY ENGINEERING, INC.
GLAZING CONSULTANTS
8501 SW 124 Ave. Ste. 205A
MIAMI, FL 33183 P: 786.360.2786
www.MCYEngineering.com mcy@mcyengineering.com

SPA150 STOREFRONT SYSTEM - L.M.I.&S.M.I.
SHANGAI SUPERHOUSE BUILDING MATERIAL
No.10 Hangfan Road, Pudong District,
Shanghai, China
TEL.86 021-5822 0630

Rev. No.	Date	Drawn By	Description

Drawn Date 04/19/2019
Drawn By

DRAWING NO.
AD19-15

PARTS

Sheet No.
8 OF 9

BILL OF MATERIALS

ITEM	PART	DESCRIPTION	MATERIAL	MANUF. / REMARKS
1	SPA15001A	JAMB	ALUM. 6063-T5	-
2	SPA15002	FEMALE MULLION	ALUM. 6063-T5	-
3	SPA15003	MALE MULLION	ALUM. 6063-T5	-
4	SPA15004	HEAD / SILL / INTERMEDIATE HORIZONTAL	ALUM. 6063-T5	-
5	SPA15005	GLASS STOP	ALUM. 6063-T5	-
6	SPA15007	JAMB FILLER	ALUM. 6063-T5	-
7	SPA10016	POCKET FILLER	ALUM. 6063-T5	-
8	SP100T003	AWING CAP	ALUM. 6063-T5	-
9	SPA13006	SCREW COVER	ALUM. 6063-T5	-
10	SPA15015	GLASS STOP	ALUM. 6063-T5	-
11	SPA13006	SASH REBATE	ALUM. 6063-T5	-
12	-	GLAZING GASKET DC 983	SILICONE	DOW CORNING
13	26162	BULB GAKSET	EPDM	-
14	-	3.82" X 0.24" BAR REINFORCEMENT	STEEL	-
15	-	0.20" THICK U-SHAPE REINFORCEMENT	STEEL	-
16	-	SETTING BLOCK	NEOPRENE	-
17	-	3/16" X 1-1/2" PH SCREW	STAINLESS STEEL	-
18	-	3/16" X 1/2" PH SCREW	STAINLESS STEEL	-

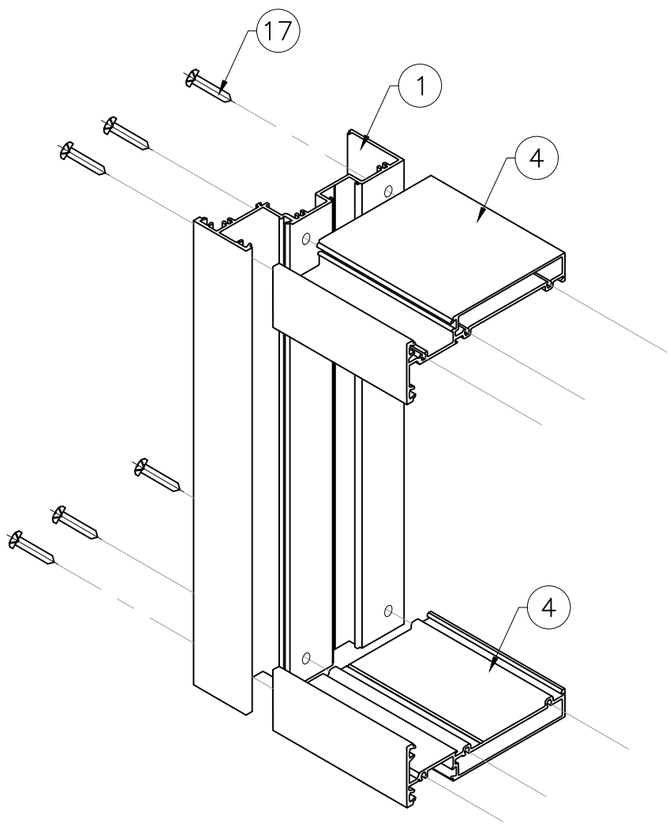

JAMB CORNER ASSEMBLY

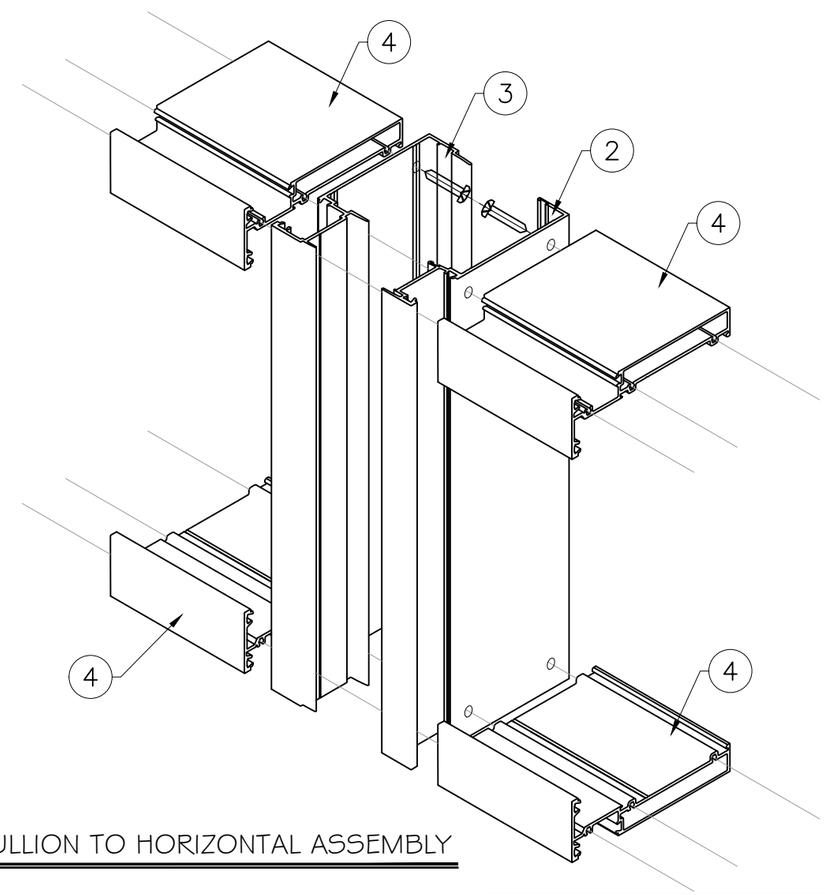

MULLION TO HORIZONTAL ASSEMBLY

FLORIDA APPROVAL:

FL # 29474.1

YIPING WANG, P.E.
FLORIDA REGISTRATION
LICENSE NUMBER
No 55983
STATE OF FLORIDA
PROFESSIONAL ENGINEER

April 22nd, 2019

MCY ENGINEERING, INC.
GLAZING CONSULTANTS
8501 SW 124 Ave. Ste. 205A
MIAMI, FL. 33183
P: 786.360.2786
www.MCYEngineering.com
mcy@mcyengineering.com

SPA150 STOREFRONT SYSTEM - L.M.I.&S.M.I.

SHANGAI SUPERHOUSE BUILDING MATERIAL
No.10 Hangfan Road, Pudong District,
Shanghai, China
TEL.86 021-5822 0630

Rev. No.	Date	Drawn By	Description

Drawn Date 04/19/2019

Drawn By

DRAWING NO.

AD19-15

BOM

Sheet No.

9 OF 9